Drawing Number

## Kabebari batten detail

### Profile: Rectangle 50x150mm

Base: 0.547kg/m
Cover: 2.007kg/m
Total: 2.554kg/m
Batten thickness: 2.0mm (top) 1.5mm (bottom)

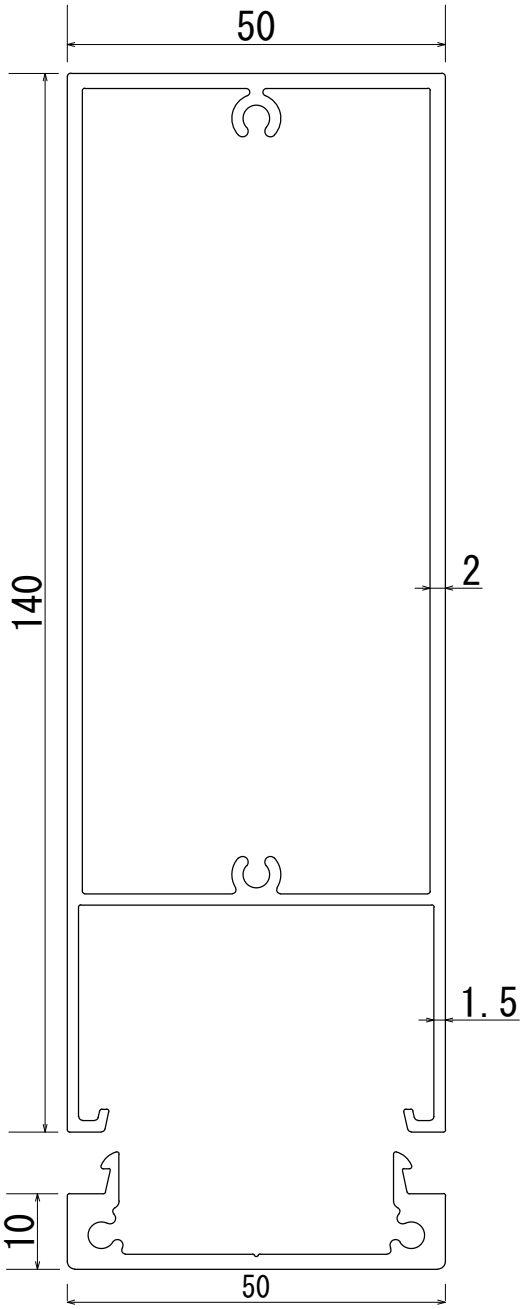


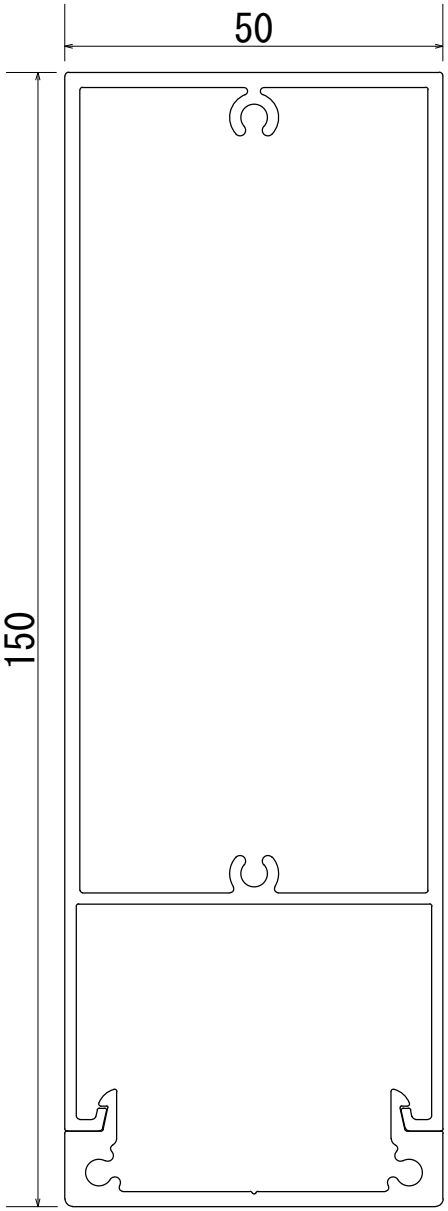


| | | | | | | | | | |
|---|---|---|---|---|---|---|---|---|---|
| 3 | | | Product Name | | | | Project Name | Creation Date | Page | Scale | Projection |
| 2 | Install | Never strike extrusion directly with a hammer or rubber mallet. Use a pine plank between the tool and the extrusion to avoid surface damage or denting. | Ever Art Wood - Kabebari | | | | Rectangle 50x150 | | 1 of 3 | 1:1 | |
| 1 | End caps | Apply exterior grade adhesive (Sikaflex) to secure cap to batten. | Approval | Chek | Drawing | Design | Customer | Distributor | | Manufacturer | |
| No. | DATE | | | | | | | covet | | Takasho | |

Drawing Number

## Kabebari batten detail

**Profile: Rectangle 50x150mm**

## Endcap detail 1

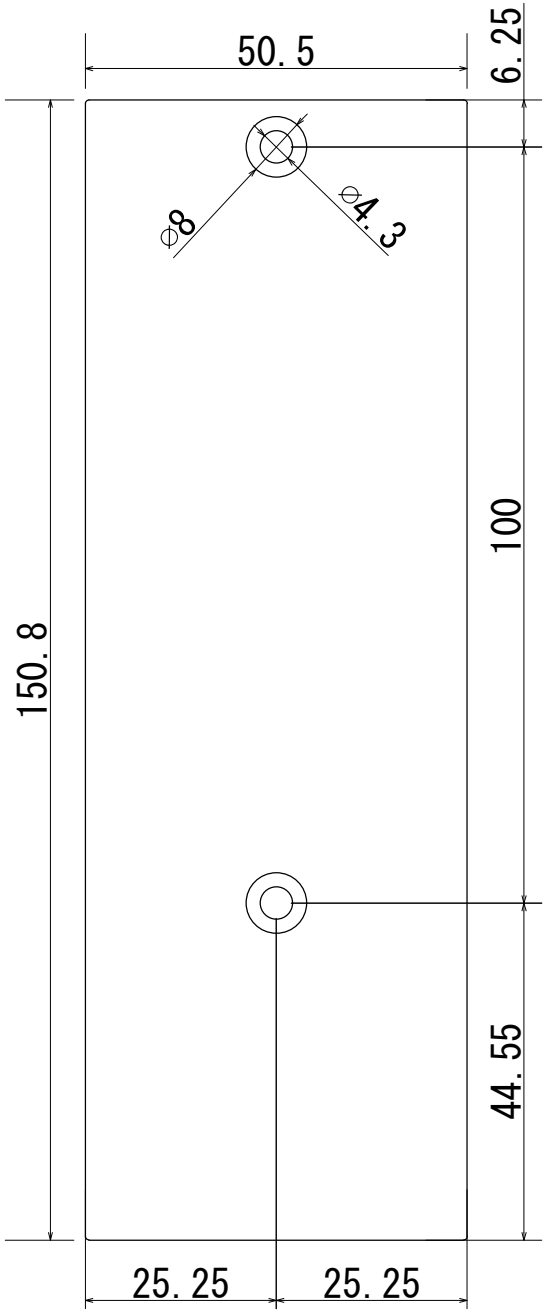


## Installation detail 2

(not to scale)

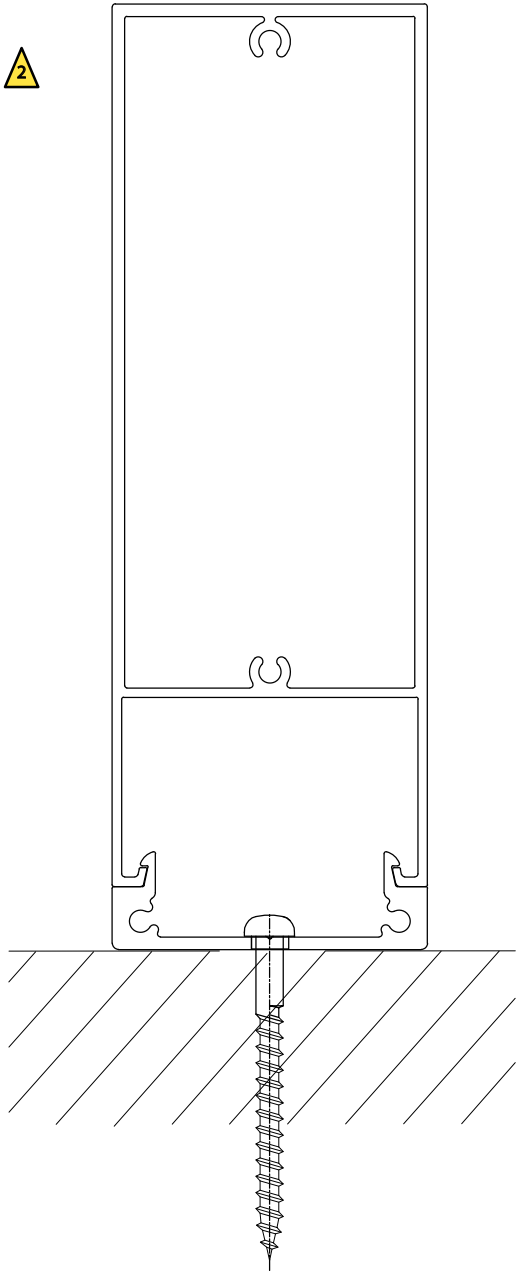

| | | | | | | | | | |
|---|---|---|---|---|---|---|---|---|---|
| 3 | | | Product Name | | | | Project Name | Creation Date | Page | Scale | Projection |
| 2 | Install | Never strike extrusion directly with a hammer or rubber mallet. Use a pine plank between the tool and the extrusion to avoid surface damage or denting. | Ever Art Wood - Kabebari | | | | Rectangle 50x150 | | 2 of 3 | 1:1 | |
| 1 | End caps | Apply exterior grade adhesive (Sikaflex) to secure cap to batten. | Approval | Chek | Drawing | Design | Customer | Distributor | | Manufacturer | |
| No. | DATE | | | | | | | covet | | Takasho | |

Drawing Number

## Kabebari batten detail

### Profile: Rectangle 50x150mm

## Kabebari Batten Installation Guide

- Aluminium can be damaged if mishandled. Never strike directly with a hammer or rubber mallet. Use a pine plank between the striking rubber mallet and the extrusion to avoid surface damage or denting.
- Cut aluminium with a drop saw using an aluminium blade.
- Always cap ends of extrusions with supplied end caps or a flashing to avoid moisture ingress.
- Plastic end caps must be securely inserted with screws supplied or sikafelx applied to the inside of the extrusion before inserting. This will prevent slippage of the extrusion.
- All end caps can only be applied to straight 90 degree cuts. They cannot be applied to angle end cuts.
- Ensure appropriate screws are used to suit the substrate you are fastening to. It is important to use stainless steel or bi-metal screws for all metal surfaces impacted when fastening (i.e. furring channels, top hats, steel frames). This will prevent galvanic reaction between the screw/substrate and aluminium extrusion.
- Fasten at maximum 1 metre spans. Please contact Covet for further information.
- Always fasten the male (base) section first. The female (top section) clips over the top. They can also slide on if necessary.

| | | | | | | | | | | |
|---|---|---|---|---|---|---|---|---|---|---|
| 3 | | | Product Name | | | | Project Name | Creation Date | Page | Scale | Projection |
| 2 | Install | Never strike extrusion directly with a hammer or rubber mallet. Use a pine plank between the tool and the extrusion to avoid surface damage or denting. | Ever Art Wood - Kabebari | | | | Rectangle 50x150 | | 3 of 3 | not to scale | |
| 1 | End caps | Apply exterior grade adhesive (Sikaflex) to secure cap to batten. | Approval | Chek | Drawing | Design | Customer | Distributor | | Manufacturer | |
| No. | DATE | | | | | | | covet | | Takasho | |